PART NO.	STOCK CODE	VARIANTS
BE-210C	A1239	BLACK & WHITE (PAL)
BE-810C	A1242A	COLOUR (PAL)
BE-811C	A2914	COLOUR (NTSC)

RevNo	Revision note	Date	Signature	Checked

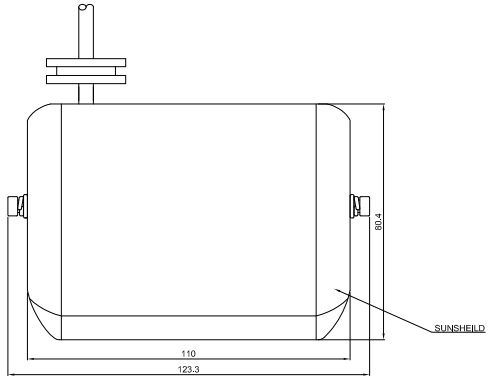

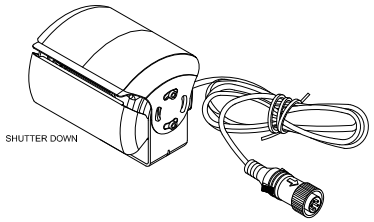

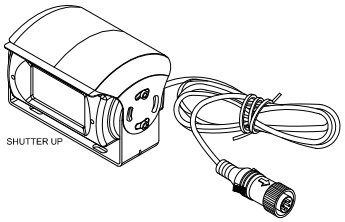

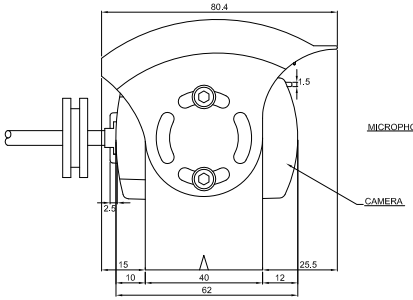

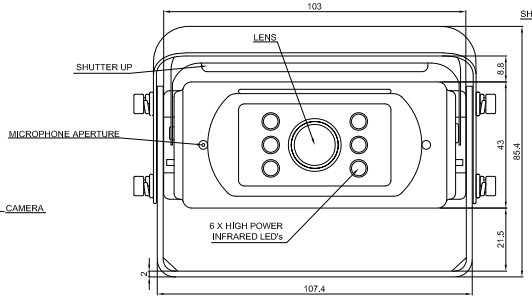

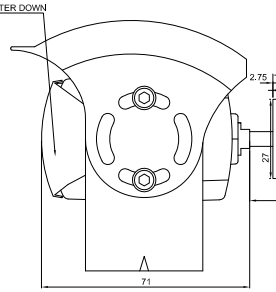

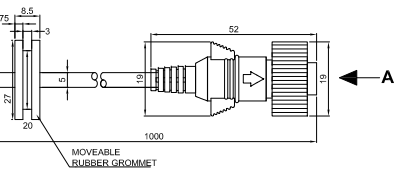

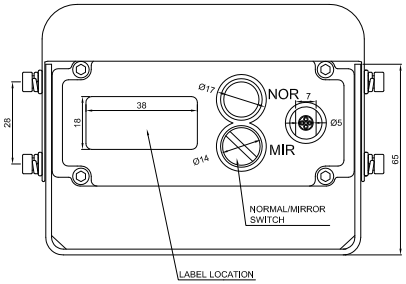

VIEW A

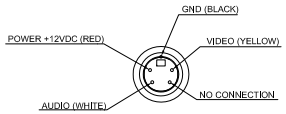

4-PIN DIN MALE
MATING FACE

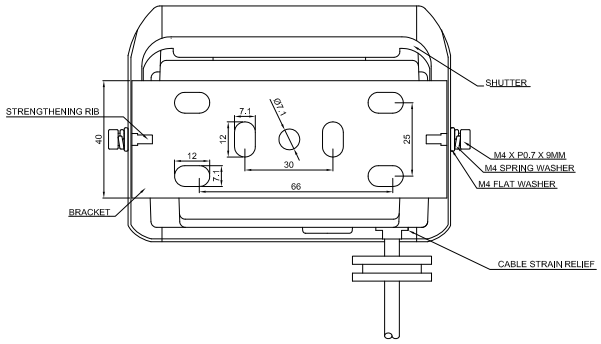

NOTES:
DIMENSIONS IN MM
REFER TO "PRODUCT SPECIFICATION" FOR MORE DETAILS

PROPRIETARY NOTICE
THIS DESIGN AND TECHNICAL INFORMATION APPEARING ON THIS DRAWING IS THE PROPERTY OF BRIGADE ELECTRONICS PLC, AND IS DISCLOSED IN CONFIDENCE. IT IS NOT TO BE COPIED, REPRODUCED, REVEALED TO OR APPROPIATE BY OTHERS, EITHER IN WHOLE OR IN PART WITHOUT THE EXPRESS WRITTEN CONSENT OF BRIGADE ELECTRONICS PLC.

Itemref	Quantity	Title/Name, designation, material, dimension etc		Article No./Reference	
Designed by M.BUTLER	Checked by D.KERAI	Approved by - date S.MATTHEWS	Filename GM	Date 13/02/09	Scale N/A

BRIGADE ELECTRONICS

BE-210C (A1239)

BE-000691-00-09 | Edition A | Sheet 1/1